searchlight

ASSEMBL Y
INSTR UCTIONS

1541
QL01689
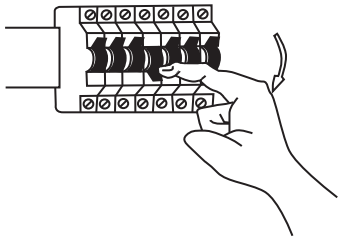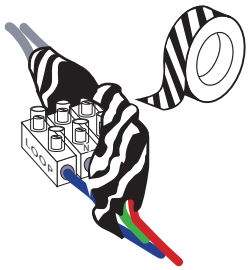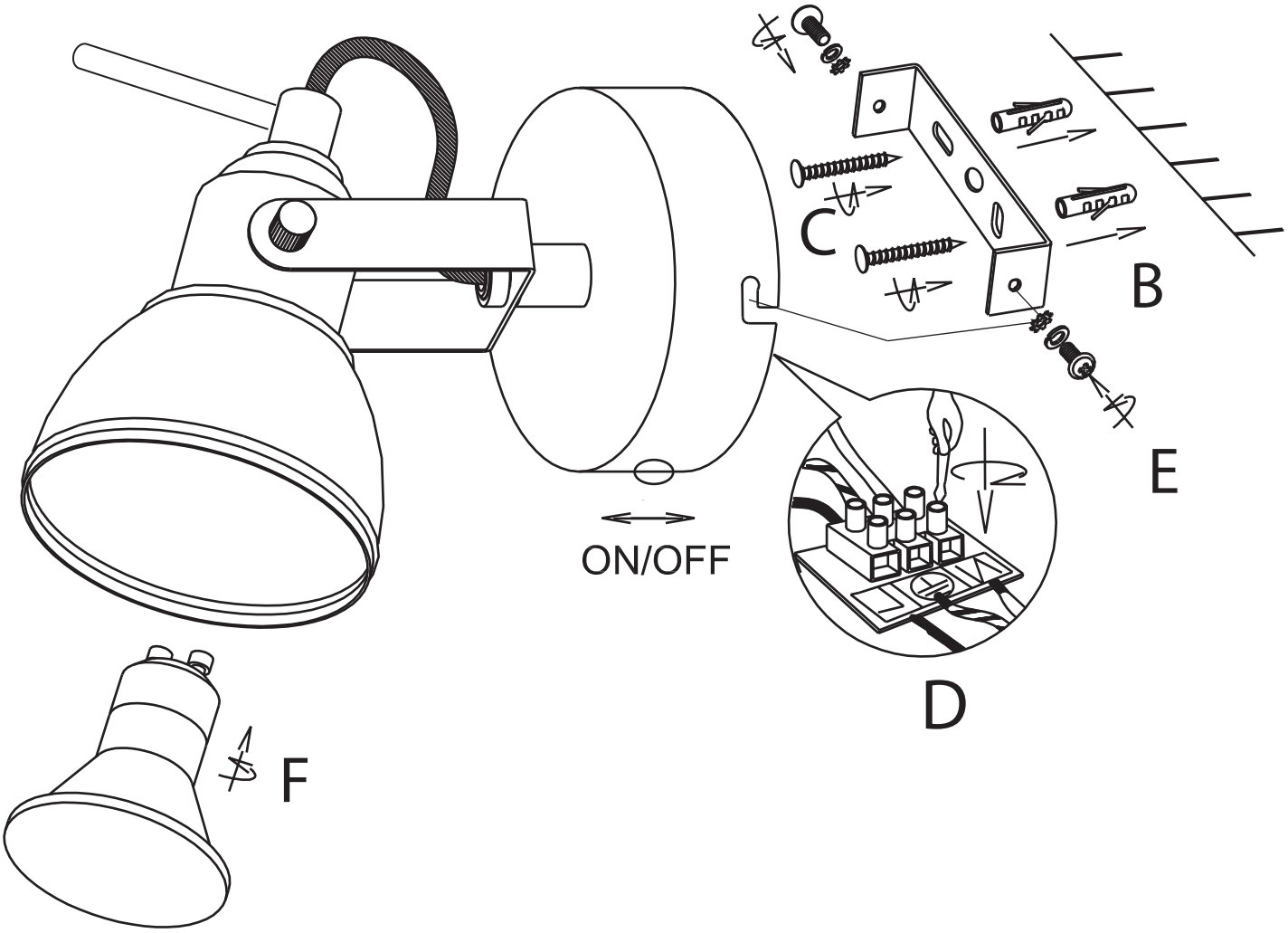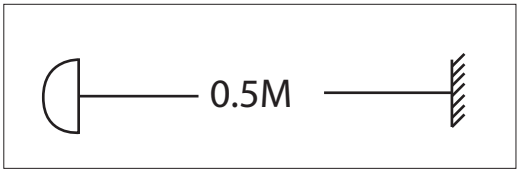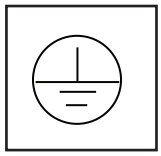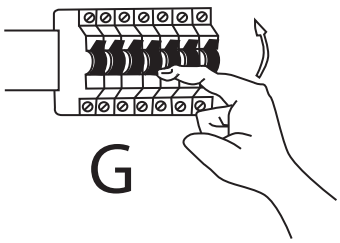
A